STERLING CRANE

TRANSPORTATION SPECS - Boom Trucks

USTC MODEL 1700JBT - 17 TON CAPACITY

COMPONENT WEIGHTS	LBS.	KGS.
Complete Crane (incl. block)	35,120	15 931
Crane w/o truck	15,365	6 970

ADDITIONAL INFORMATION		
16.5 Ton Block	220	100
Main Load Line (9/16" x 300')	180	82
8 X 19 semi non-rotating		
Mounted on Sterling LT7501		

DECK INFORMATION

8' x 22' wood deck c/w 36" tool box

TRANSPORTATION		
Average Driving Speed		80 km/hr
Alberta, British Columbia and Saskatchewan		Trailer
• All Seasons	Drive	-

STERLING CRANE

FRONT MOUNT
TANDEM AXLE

Min. F.A.W.R.: 14,400 #
Min. R.A.W.F.: 34,000 #
Truck Frame: 15.9 in.³ S.M. on 110,000 psi
Consult factory for rear mount configuration, recommended truck requirements, and 180° and 360° Area of Operation.

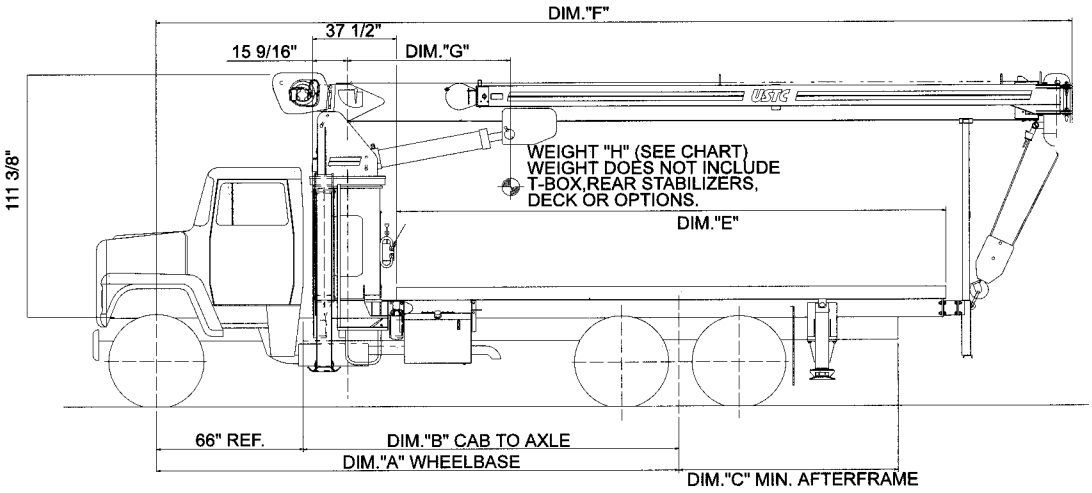
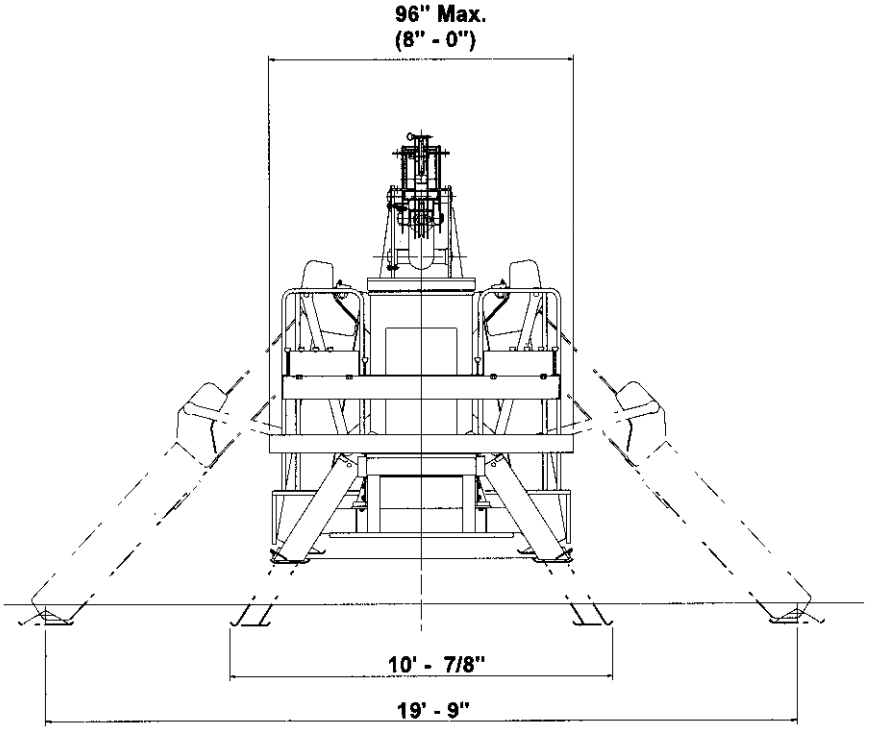
	DIM. "A"	DIM. "B"	DIM. "C"	DIM. "D"	DIM. "E"	DIM. "F"	DIM. "G"	DIM. "H" WET
BOOM LENGTH	MIN. WHEELBASE	MIN. CAB TO AXLE	MIN. AFTERFRAME	MAX. CAB HEIGHT	MIN. DECK LENGTH	CL FRT.AXLE TO BOOM TIP	CENTER OF GRAVITY LOC	(SEE NOTE ON DRAWING)
47 ft.	210"	144"	75"	68 1/2"	16 ft.	318 9/16" (26'-6 9/6")	38.45"	11,150 lbs.
70 ft.	234"	168"	75"	68 1/2"	20 ft.	410 9/16" (34'-2 9/16")	65.44"	12,329 lbs.